JS5

Operation Manual

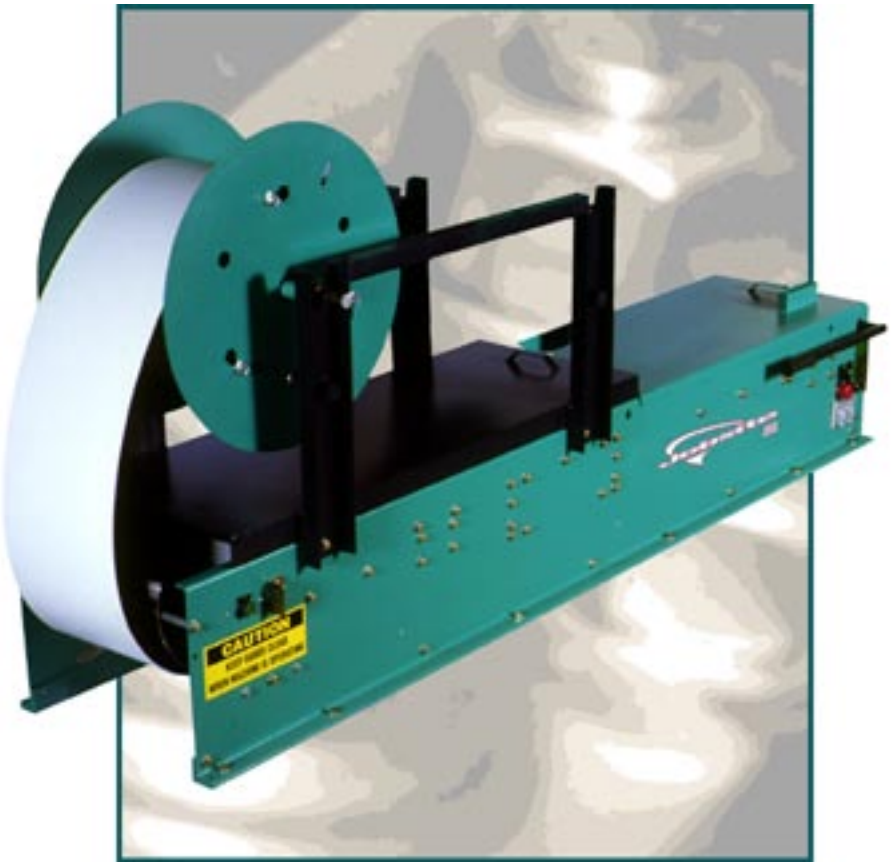

Jobsite®
QUALITY WITHOUT QUESTION

841 21 1/2 Road, Grand Junction, CO 81505 | (800) 992-8996 | www.jobsite-us.com

WARNING

Prior to set-up and use of this equipment, **ALL OPERATORS MUST READ THIS MANUAL** to educate themselves as to the proper operation of this equipment. This machine has many moving parts which can create the potential for serious physical injury. The operator also assumes all responsibility and liability for bodily or property damage in the use of this machine. Jobsite, Inc. disclaims any responsibility or liability for injury or death caused by negligence or intentional misuse of this product.

TABLE OF CONTENTS

1. SAFETY & RECOMMENDATIONS (PLEASE READ) 1
2. MACHINE COMPONENTS 2
3. COIL SIZING 3
4. GUTTER TERMINOLOGY 4
5. BEFORE OPERATION 5-7
6. OPERATION.....8-10
7. BASIC ADJUSTMENTS 11-15
8. FREQUENTLY ASKED QUESTIONS 16
9. TROUBLESHOOTING 17-20
10. ACCESSORIES..... 21
11. CONTACT JOBSITE 22

SAFETY & RECOMMENDATIONS

GENERAL SAFETY AND RECOMMENDED TIPS

1. Read this manual before attempting to operate the machine.
2. Observe all safety signs and do not operate machine with any safety covers removed.
3. Stop the machine and disconnect power to the machine before making any adjustments.
4. Always conform to all local, and national safety codes concerning operating and lifting equipment that is used in conjunction with this machine.
5. Do not wear loose clothing, or jewelry when operating this machine.
6. Be aware that any foreign objects dropped on the coil will be carried through the machine and may cause damage.
7. Always keep safty covers (lids) on during storage and operation.
8. Avoid storing your machine outdoors for a long period of time. Cover your machine with a tarp for storage, but provide good ventilation to combat condensation and rust.
9. Keep your machine clean. This will increase the life of the machine, and make adjustments easier.
10. Keep components such as the shear and chains lubricated.
11. It is very important that all set screws, bolts, nuts, etc are constantly checked for tightness. This helps keep the machine in adjustment, and lessens the danger of a piece of hardware falling into the machine and causing serious damage to the rollers.
12. **Do not store, or transport the machine without gutter material running the full length of the machine.** The main forming rollers are set in close proximity to one another to create traction. Because of this fact, the rollers could be damaged during transport. Material in the machine also helps maintain adjustment.

MACHINE COMPONENTS

JS5 SPECIFICATIONS

Length: 96 inches (244 CM)
Width: 18 inches (46 CM)
Height w/Reel Rack: 45 inches (114 CM)
Height wo/Reel Rack: 18 inches (46 CM)
Weight: approximately 1,100 pounds (500 K)
Decoiler Capacity: 800 pounds (362 K)
Power: 1HP, 110V, 13AMP, single phase motor
Drive: 12 forming rollers driven by sprockets, chains and gears
Speed: 35 feet (10.67 M) per minute
Controls: manually operated
Shear: Easy-cut guillotine, dual chain drive, hand operated

JS5 ORIENTATION

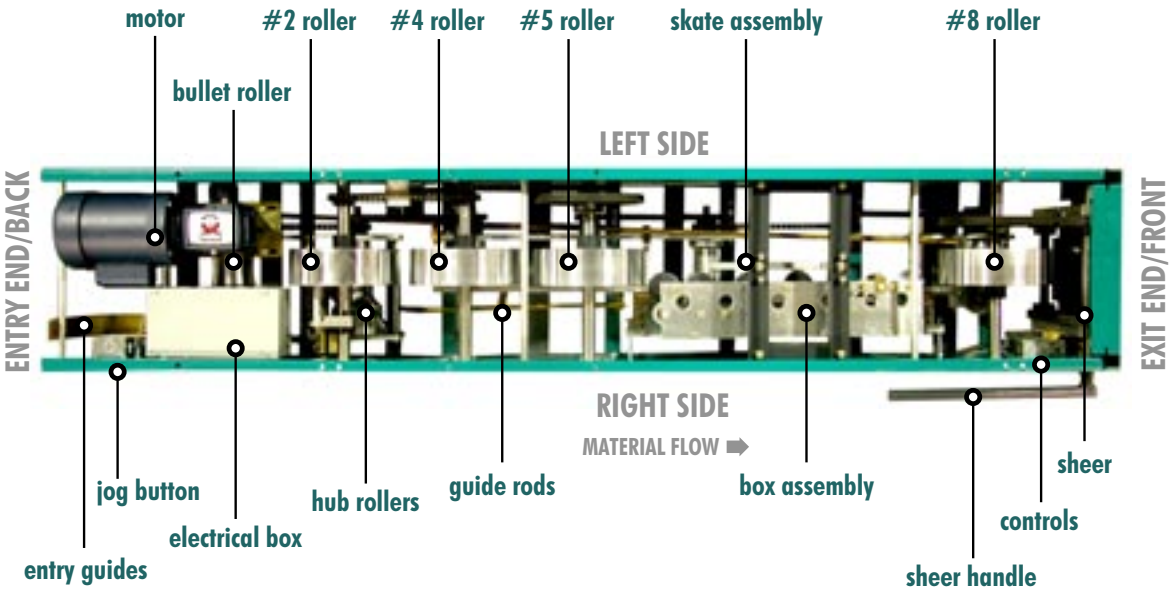

COIL SIZING

JS5 COIL SPECIFICATIONS

The Jobsite JS5 is capable of running a variety of different coil materials. Refer to the specifications below for proper material selection.

Material Width: 11 3/4" (30 CM) to 11 7/8" (30.16 CM)

Painted Steel: MAX 24 gauge, MIN 26 gauge
Aluminized Steel: MAX 24 gauge, MIN 26 gauge
Galvanized Steel: MAX 24 gauge, MIN 26 gauge
Aluminum: MAX 0.032, MIN 0.027
Copper: MAX 20oz half hard, MIN 16oz quarter hard

Contact your Jobsite representative for more information on coil suppliers.

The machine has been set-up to run one specified material and thickness. If different materials and thicknesses are used, the outcome of the gutter may not be as expected. Refer to the troubleshooting section on pages 17 through 20 for gutter correction.

GUTTER TERMINOLOGY

K-STYLE GUTTER PROFILE

These are the terms that Jobsite, Inc. uses to describe the profile of a gutter.

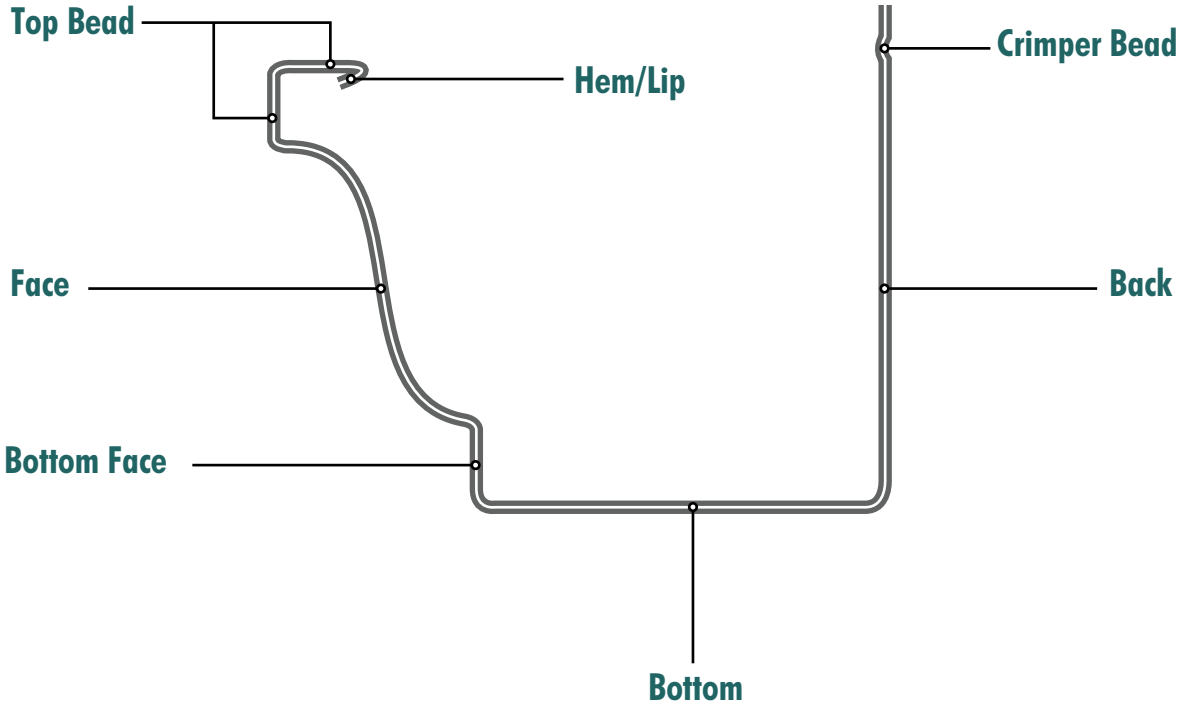

VEHICLE SELECTION

Make sure the vehicle for transporting your machine can handle the weight of the machine (1,100 LBS/499 K) as well other materials including coil and tools. Check with the vehicle manufacturer for the G.V.W. (Gross Vehicle Weight) and limitations.

PROPER MOUNTING

Once you have selected a vehicle, your machine must be properly mounted and secured to your vehicle or trailer bed. Holes in the feet of the machine are provided for this purpose. Your vehicle should be on a level surface when mounting the machine. **DO NOT cinch the machine down to an unlevel, or twisted bed surface.** If this happens critical adjustments will be lost, and the performance of the machine will be greatly compromised. Use hard rubber bushings and spacers to make up for any discrepancies between the bed and the frame. Use 3/8 bolts to mount the machine. It is recommended that the floor underneath the machine be sealed to prevent road debris from entering the bottom of the machine.

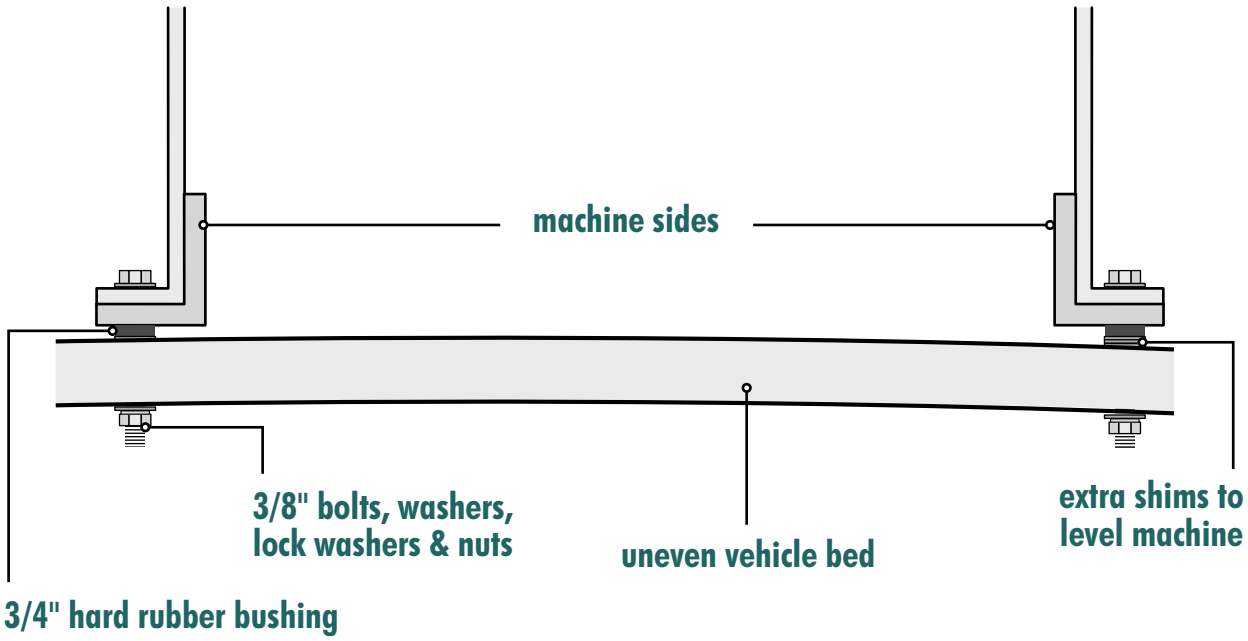

LOADING COIL

Loading Coil onto the Reel Rack Assembly

The reel rack is equipped with retainer lock pins that keep the reels from turning during transportation. Remove the cotter pin and pull the locking pin out of the reel hole to let the reel rotate freely. Always replace the cotter pin after removing.

To load coil onto the reel, loosen set collars and remove the reel from the reel rack. Loosen, but do not remove the three bolts on the removable side of the reel. Rotate the removable side to line up with the key holes and remove. Place the coil on reel. Make sure the coil is placed in the correct direction and replace removable side and re-tighten the three bolts. Because of the massive weight of the coil it is advised that a fork lift be used to load the reel back onto the reel rack assembly. Tighten set collars.

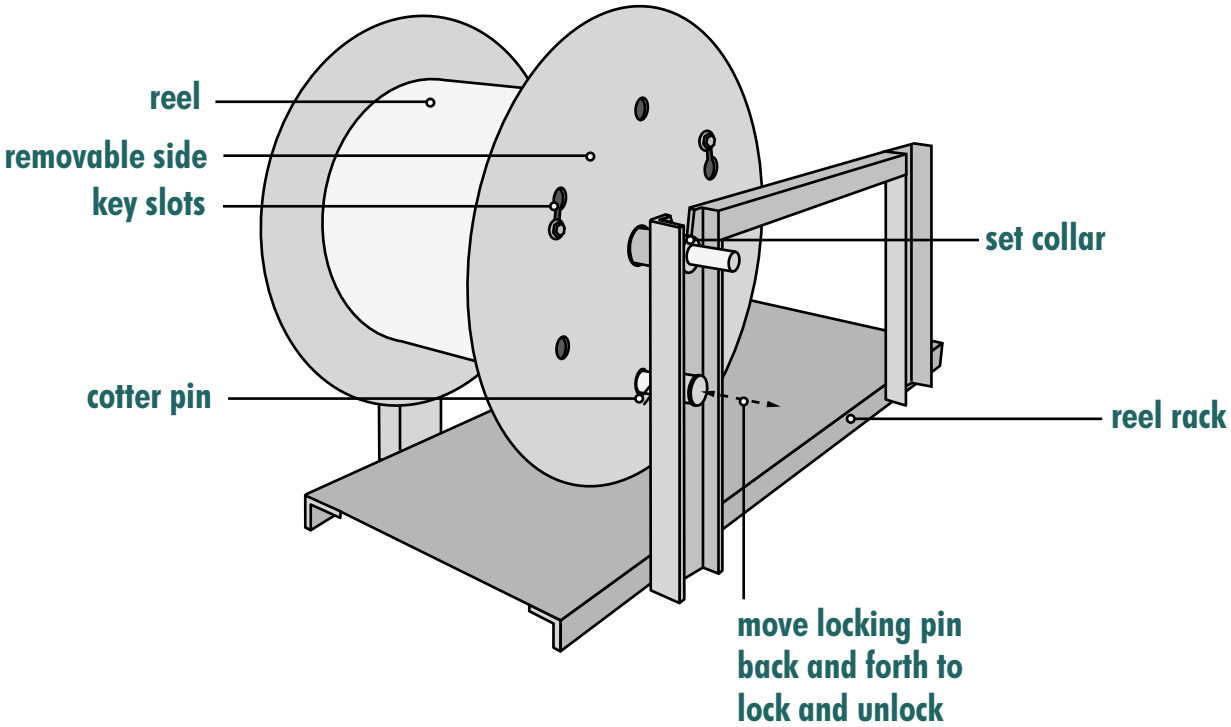

LOADING COIL CONT...

Loading Coil into the Machine

The reel rack and reels are permanently centered above the machine and the entry guides have been correctly adjusted by the factory to properly feed the coil into the machine. In case of misalignment follow the steps on page 12 for proper entry guide adjustment.

Once the entry guides have been checked the machine is ready to load coil. Make sure all safety covers are in place and run-out any piece of gutter material that has been stored in the machine for transportation. To ensure material will run through the machine smoothly, the corners of the coil must be cut at approximately 45° angle, 4" (10.16 CM) in and 4" down. After cutting the corners, insert the end between the entry guides and use the jog button to slowly run the material through the machine. Stop at each station, including the shear, to ensure material will smoothly run between the rollers. If the material becomes stuck at any station, reverse the material out of the machine and check for blockage. Once stations are clear, cut the roll formed end off and start over. DO NOT reverse the machine after the material has entered the box assembly.

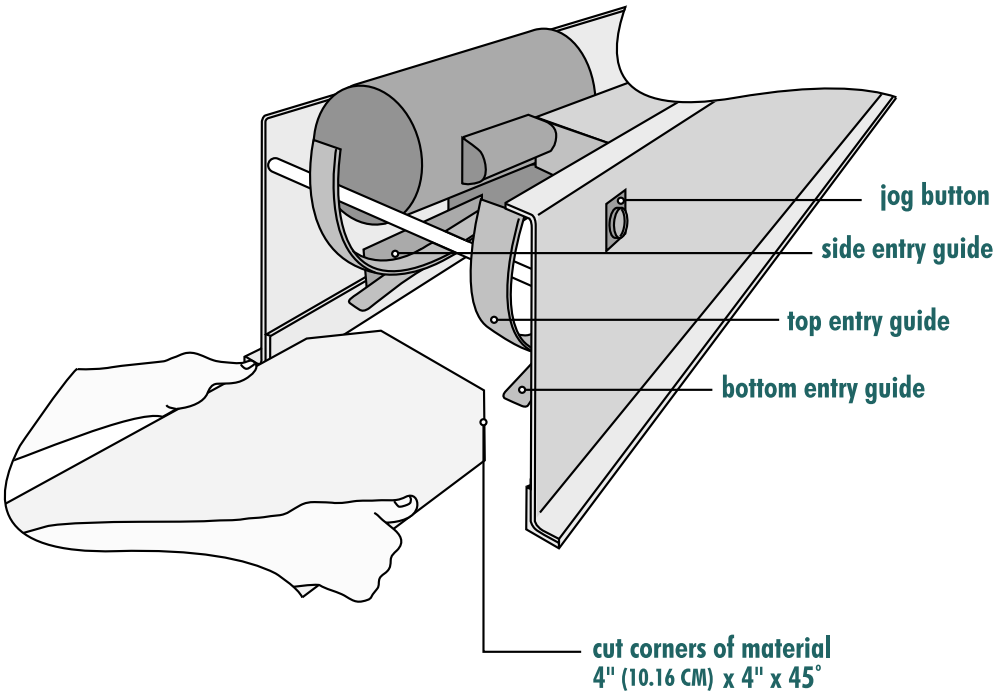

CONTROLS & ELECTRICAL

Jog/Run Switch - Use this switch to change between Jog mode which runs the machine manually via the Jog button or Run mode which will run the machine continuously. To stop the machine while continously running switch to jog mode.

Jog Button - Use this button to manually run the machine when it is in Jog mode. There is a jog button located at the entry end and exit end of the machine. Also use this button to start the machine while in Run mode.

Forward/Reverse Switch - Use this switch to change from running the machine forward or reverse. The machine will not operate in reverse while in run mode.

Emergency Stop - Use this button to disengage the power from the machine. The button must be pulled back out to start operation.

Machine Power

The JS5 is powered by a 1 HP T.E.F.C. motor which requires 110 V.A.C. and 13 Amps. The electrical plug can be found at the exit end of the machine. It is important to adhere to the minimum extension cord wire size as prescribed by the motor manufacturers warranty. The warranty requirements are as follows:

- up to 25 feet = 12 gauge
- 25 to 50 feet = 10 gauge
- 50 to 100 feet = 7 gauge

The electrical outlet is located below the controls on the exit end. When using this receptacle, use devices that are 110 volt and only pull 10 amps. Do not connect any other motor powered device while running the machine.

ELECTRICAL & CONTROLS

JS5 Electrical Drawing

Refer to this electrical drawing for standard 120 V.A. C. wiring. Contact your Jobsite representative for different electrical drawings.

WARNING: Only someone familiar with electrical practices and drawings should attempt to adjust the electrical on this machine.

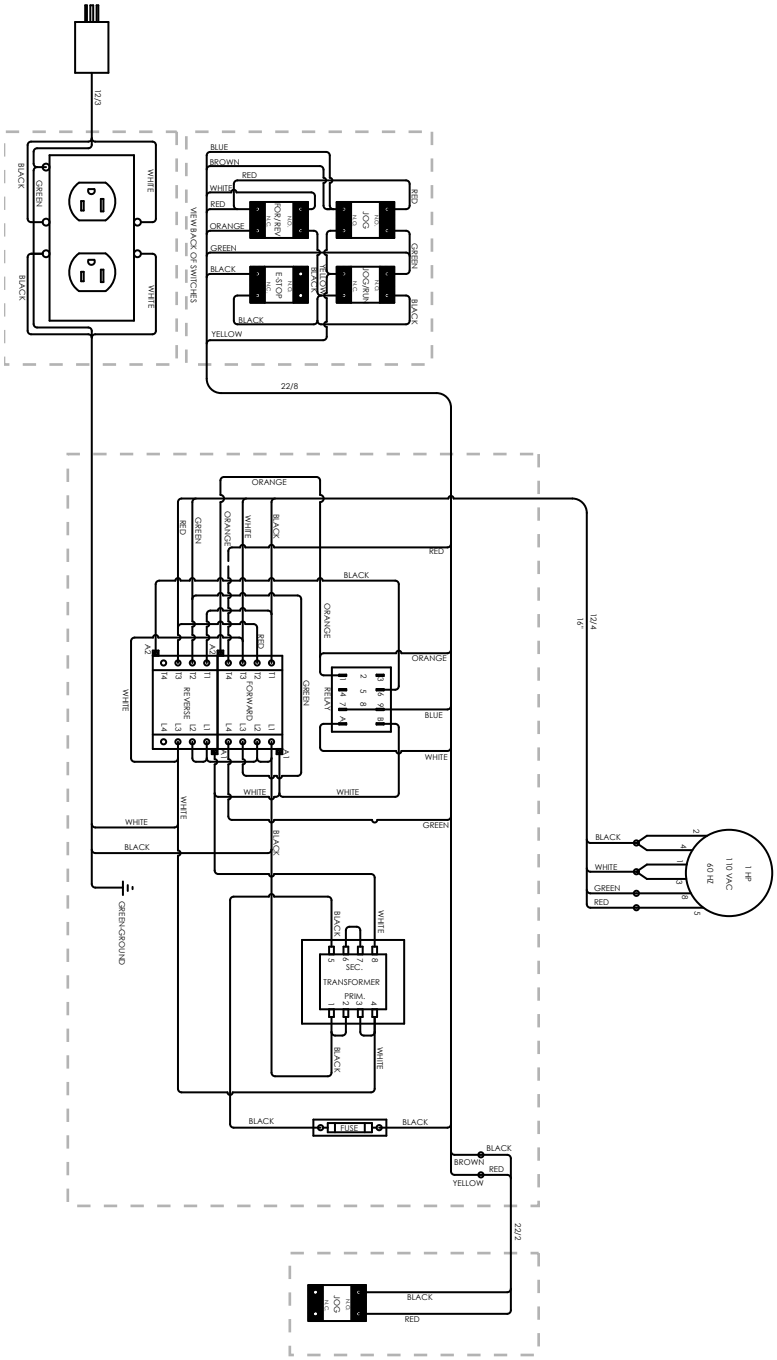

RUNNING GUTTER

Measuring Gutter

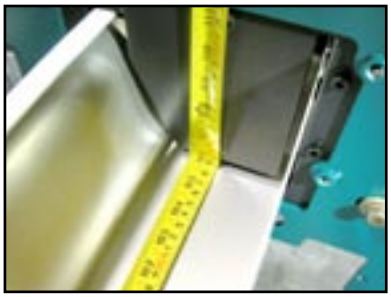

Use a tape measure to run the length of the gutter as it comes out of the machine. Measure from the end of the gutter to the face of the steel plate in front of the shear blade. Remember to add 7/8" (2.22 CM) to compensate for the thickness of the steel plate. If too much gutter has been run out it is recommended to not reverse the machine. If need be, do not reverse the gutter more than 10" (25.4 CM).

Run Out Stands

The use of run out stands is an important part of keeping the gutter straight. A run out stand should be used about every 10 feet (3 M). If one is not used the weight of the coil will de-shape the gutter downwards. Also be careful not to adjust the run out stand too high as it could de-shape the gutter upwards. Jobsite manufactures run out stands and are available for purchase.

Manual Shear

The manual shear is operated by rotating the shear handle 180 degrees which moves the shear blade into the up or down position. When shearing material a fair amount of force is required. After cutting the material, make sure the handle is returned to the up position before running more material. Failure to do so could cause a jam and serious damage to the machine. See page 15 for basic shear maintenance.

BASIC ADJUSTMENTS

The basic adjustment section covers a few adjustments and maintenance tips to keep the machine in working order and to prolong the life of the machine. It is recommended that only someone familiar with the machine's operations perform these adjustments and always unplug the machine power before makeing any adjustments. Brand new machines have been correctly adjusted by the factory and should not require further adjustment. If a problem occurs that is not covered in this manual, contact your Jobsite representative for further assistance.

BOX ROLLER ASSEMBLY

Check to see if the following specifications are true for the box roller assembly. Do not try any other adjustments on this unit unless you have been trained by a Jobsite representative.

1. Make sure the entry end of the assembly is set 2 1/2" (6.35 CM) from the right side panel and the exit end is set 2 3/4" (7 CM) from the right side panel. Initial factory setting may differ from these recommended settings.

2. Make sure the assembly stays level from the right to left side of the machine.

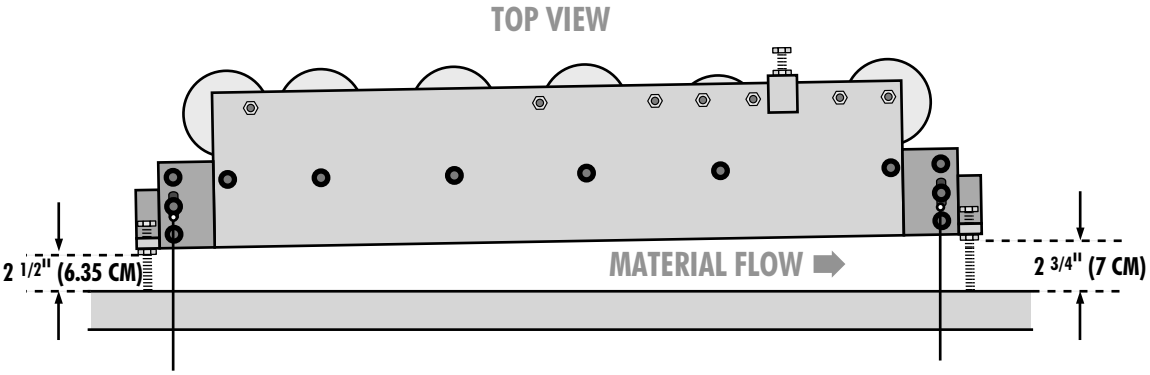

To adjust box up and down loosen center set screw and use outside screws for adjustment.

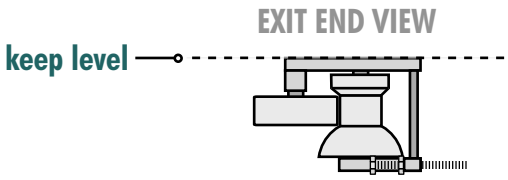

ENTRY GUIDE ADJUSTMENT

The entry guides align the coil into correct position for roll forming gutter. Follow the tips below to ensure proper alignment.

1. Initially set up the right guide 2 1/2" (6.35 CM) inside of the frame to the inside of the guide. Initial factory setting may differ from these recommended settings.

2. Make sure the left entry guide is parallel to the right entry guide. If the left guide is canted too far out a number of things can happen: 1. The lip on the box may be too large or too small; 2. The front or back edge may mushroom; 3. The gutter may skew one direction or another; 4. Chafing can occur. (Chafing is when paint flakes off of the side of the coil. Flakes in the machine may cause damage to rollers and the gutter.)

3. If the lip is too large adjust both guides left. If the lip is too small, adjust both guides right. NOTE: Small adjustment to the guides greatly affect the position of the material in the machine! Also, Make sure the adjusting screws in the material guides are lubricated so that they will adjust easily

4. Inspect the entry guides periodically for wear. If worn, replace them.

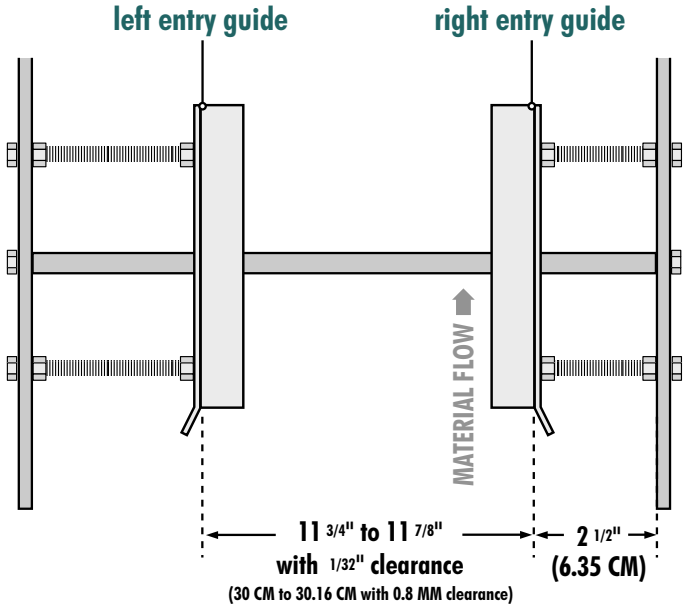

ROLLER GAP SETTINGS

When troubleshooting, follow the chart below for the recommended drive station clearance settings. It is not recommended that someone adjust the clearance settings unless they have been trained on the proper adjusting procedures. Contact your Jobsite representative for more information on training. Adjust the top rollers only. The entire bottom keel assembly is factory set and does not get out of alignment unless the machine has been dropped or damaged.

LABEL	STATION	RECOMMENDED CLEARANCE
A	#8 Top Roller to Bottom Roller	0.000 (touching flush)
B	Bell Wheel Gap to edge of #8 Top Roller	0.032" (0.813 MM)
C	Skate Roller to Bottom Roller	Material Thickness
D	#2,4,5 Top Rollers to Bottom Rollers	0.010" (0.254 MM)
E	#2,4,5 Top Roller to the inside of the Left Keel	0.900" (22..86 MM)
F	Top Hub Roller to Bottom Hub Roller	0.054" (0.137 MM)
G	#1 Bullet Roller to Bottom Roller (not middle)	0.013" (0.33 MM)

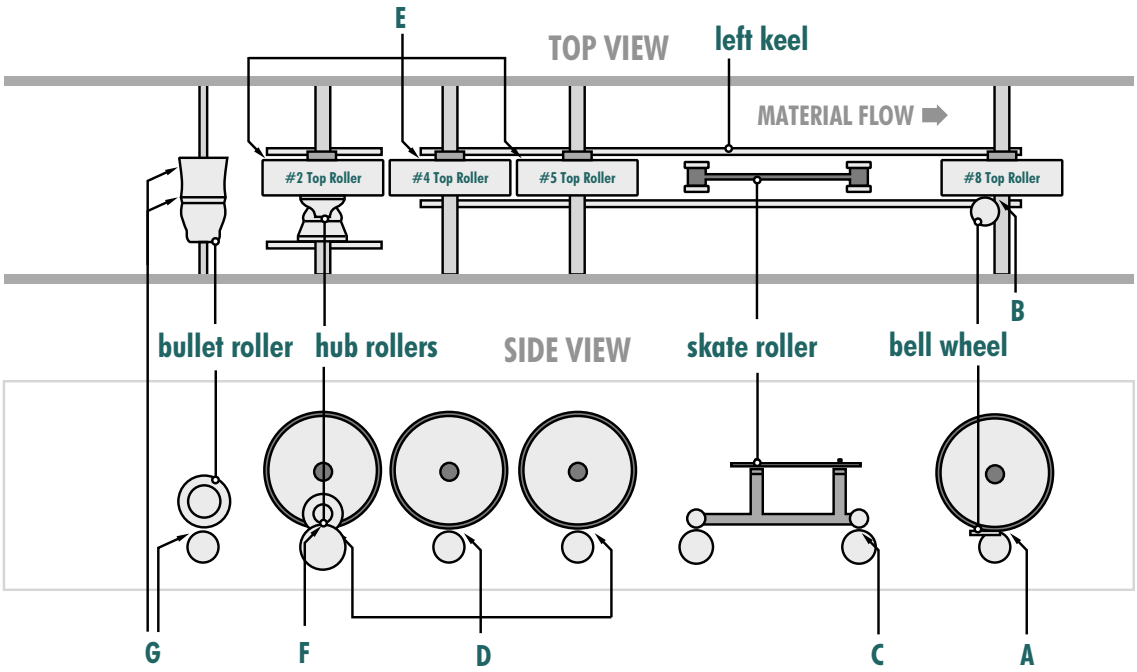

CRIMPER ASSEMBLY

The crimper assembly is a simple but important forming station. It gives the gutter rigidity and helps to keep it running straight and true. The crimper rollers should be set as follows:

1. The top back of the gutter should be flush with the top of the bead rollers. Set the inside roller first, then the outside roller should be adjusted until a good bead is created.

   NOTE: Setting the outside bead roller too tight will cause the back side of the gutter to run uphill. Likewise setting it too loose may cause it to run downhill.

2, Tighten the bead roller set screws and re-check.

3. Once a good setting is attained between the rollers, lock down the two roller nuts.

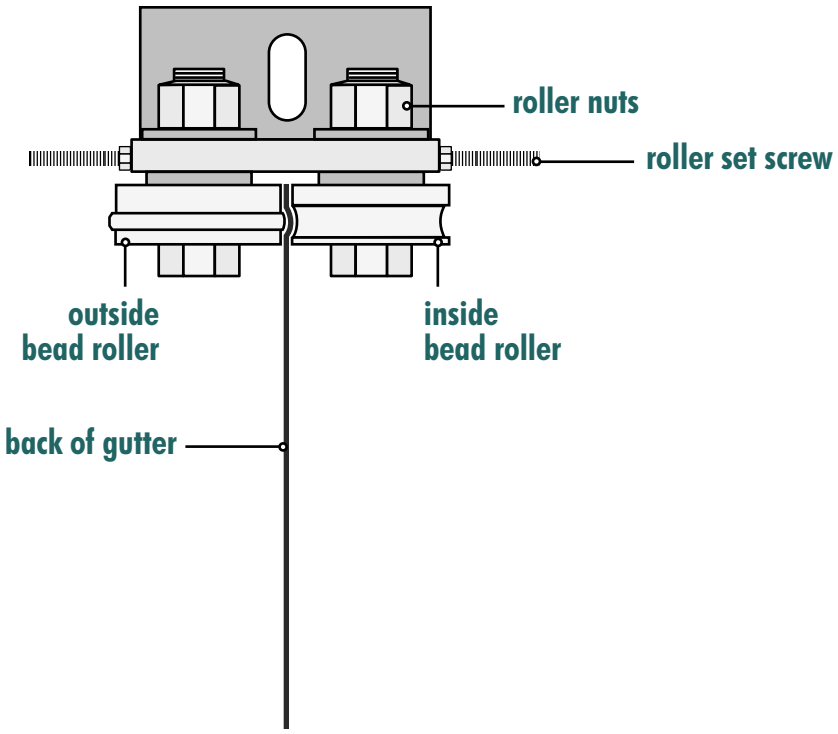

HAND SHEAR

The EZ-cut guillotine shear is a relatively maintenance free part of the machine, but there are a few simple tips that can keep it in good operation. Keep in mind the shear handle can be moved to either side of the machine.

1. The chain should be lubricated once a month with an industry approved chain lube.
2. The shear blade should be lubricated once a day covering the entire blade while rotating the shear handle. Use a multi-purpose spray lubricant like 3-In-0ne or a lubricant with Teflon. Do not use WD-40. The blades and dies should stay sharp for many years with proper maintenance. If they do become dull they should be replaced or sharpened by a Jobsite representative.
3. The chip bin under the shear should be emptied regularly to prevent jamming.
4. The chain sprockets should be tightened regularly.

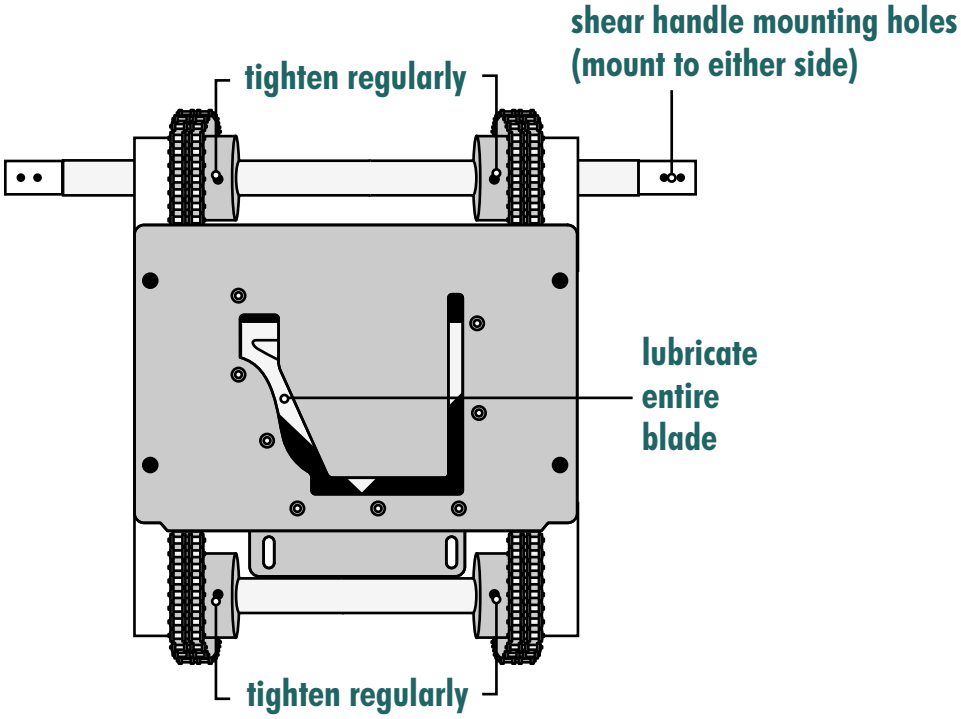

FREQUENTLY ASKED QUESTIONS

1. WHY IS PAINT PEELING OFF MY GUTTER?

A. Try running a different color coil (make sure it did not come from the same lot run of coil). If paint does not come off 2nd coil, the paint on the 1st coil is most likely bad.

B. Check rollers for damage or build-up of foreign product (i.e., paint, tape, plastic, etc.).

C. Check clearance of rollers (See page 13).

2. WHY AM I LOOSING HEM OR LIP AFTER 10-15 FEET?

A. Lower entrance end of box assembly 1/16" (See page 11). And/or, move entry guides 1/16" towards the face side panel (See page 12).

3. WHY ARE THERE RIPPLES (OIL CANNING) IN THE BOTTOM OF MY GUTTER WHILE RUNNING COPPER?

A. Check to see if rollers are damaged or if roller have accumulated build-up.

B. Check roller clearances (See page 13).

C. Release pressure off of the face side of Station 8 top roller.

4. WHY IS MY GUTTER NOT STRAIGHT?

A. Refer to the Troubleshooting section (See page 16 through 19).

1. GUTTER IS RUNNING AWAY FROM THE HOUSE

When the gutter is curving away from the house, there are two adjustments that can be made to correct this problem. Always disconnect power before adjusting.

A. Add more pressure to the right side of the #8 top roller by adjusting the screws clockwise shown below. Make sure that the locknuts are secured after adjustment.

B. Unlock the swing arm bolt at the box assembly and rotate clockwise shown as below. This will only effect the top bead of the gutter. Lowering the box 1/2 turn will also help, but will cause gutter to run uphill. Make sure the locknuts and bolts are secured after adjustment.

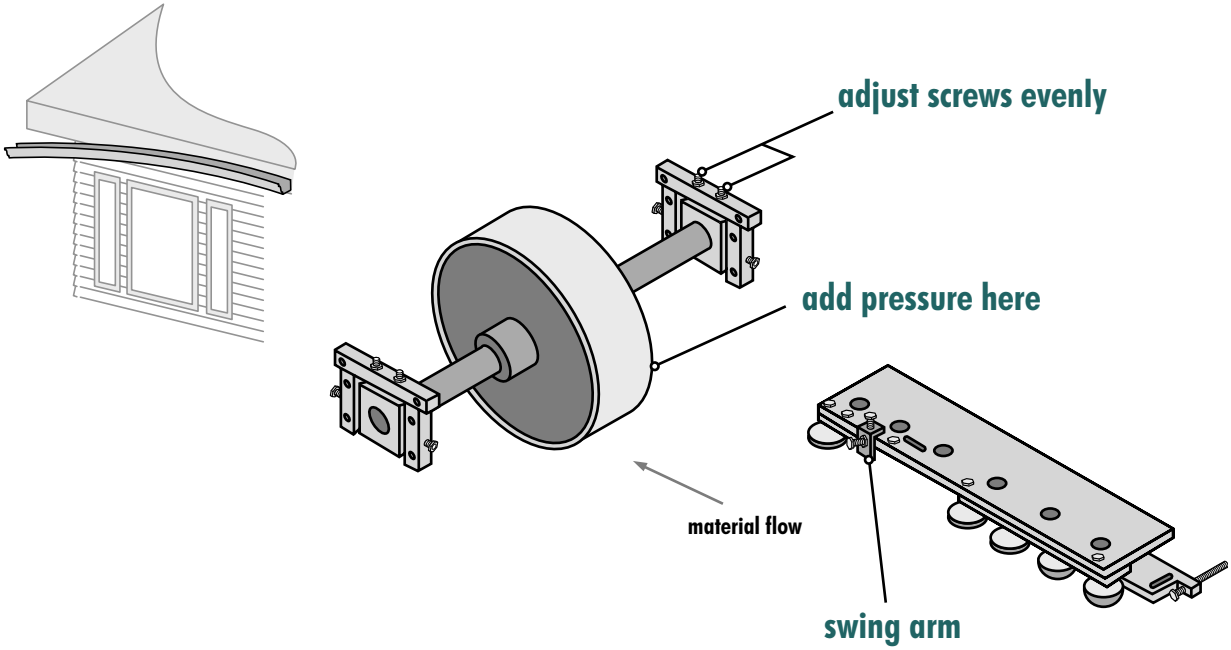

Note: When making adjustments, it is a good idea to write down how many turns are made to each adjusting screw. Then you can always reset the adjusting screws back to their original positions.

Small adjustments greatly affect the gutter path! Take care to slowly change each setting.

1. GUTTER IS RUNNING TOWARDS THE HOUSE

When the gutter is curving towards the house, there are two adjustments that can be made to correct this problem. Always disconnect power before adjusting.

A. Reduce the pressure to the right side of the #8 top roller by adjusting the screws clockwise noted below. Make sure that the locknuts are secured after adjustment.

B. Unlock the swing arm bolt at the box assembly and rotate counter-clockwise as shown below. This will only effect the top bead of the gutter. Raising the box 1/2 turn will also help, but will cause gutter to run downhill. Make sure the locknuts and bolts are secured after adjustment.

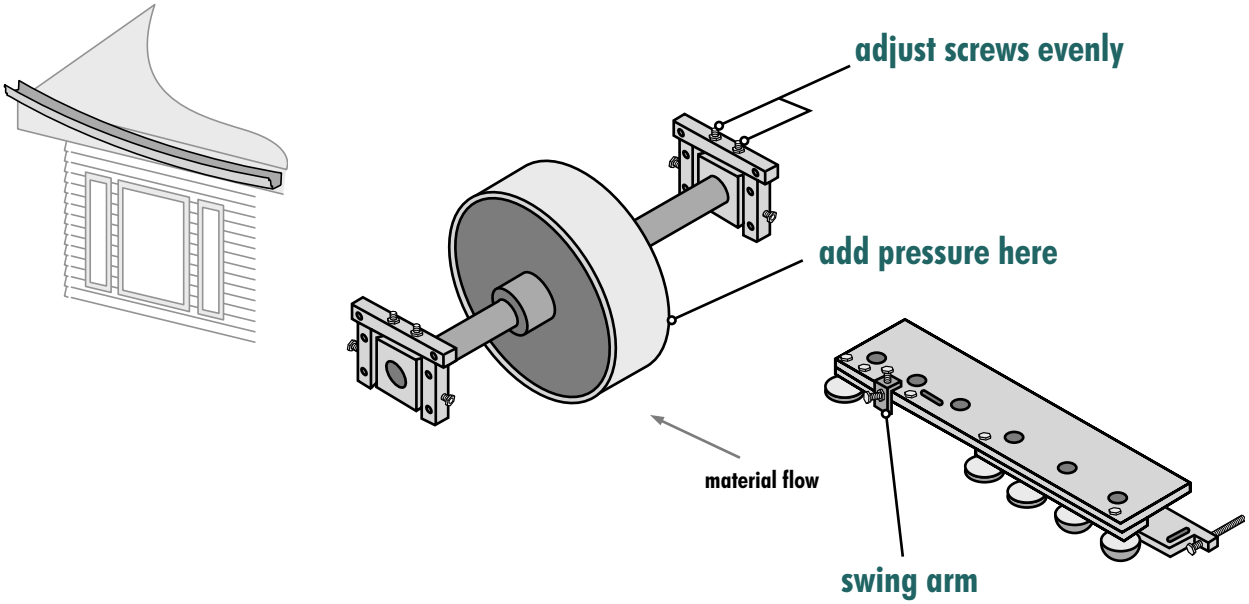

Note: When making adjustments, it is a good idea to write down how many turns are made to each adjusting screw. Then you can always reset the adjusting screws back to their original positions.

Small adjustments greatly affect the gutter path! Take care to slowly change each setting.

1. GUTTER IS RUNNING UPHILL

When the gutter is curving uphill, there is one adjustment that can be made to correct this problem. Always disconnect power before adjusting.

A. Loosen center screw on exit end of Box Roller Assembly. Adjust end up with the two outside screws 1/2 turn at a time. Make sure the two height adjustment screws are set evenly. If they are not even, the box assembly will not be level, resulting in gutter being twisted. Re-tighten center bolt.

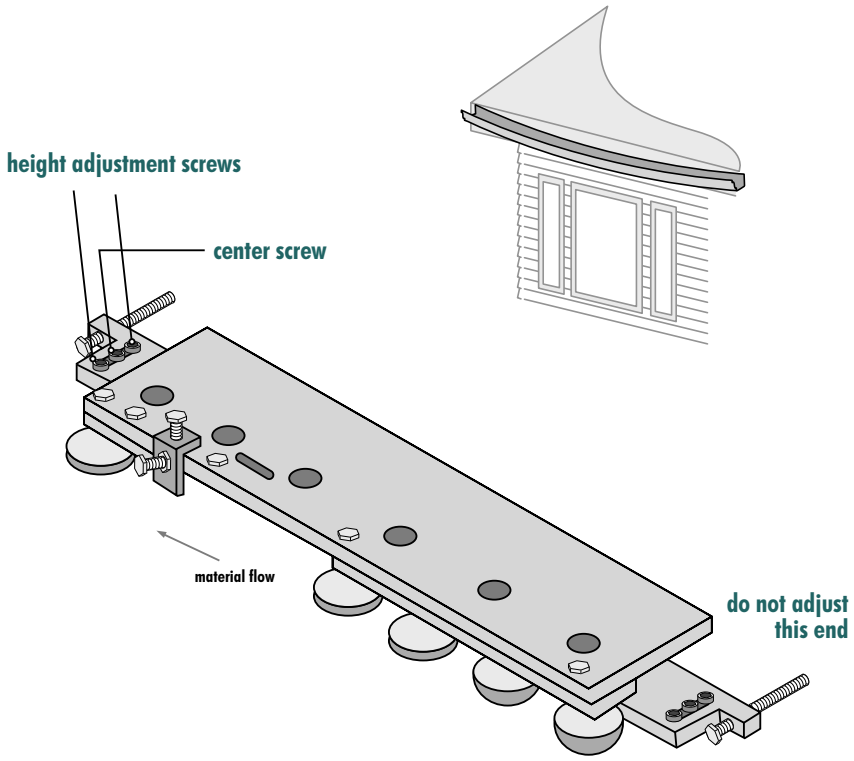

Note: When making adjustments, it is a good idea to write down how many turns are made to each adjusting screw. Then you can always reset the adjusting screws back to their original positions.

Small adjustments greatly affect the gutter path! Take care to slowly change each setting.

1. GUTTER IS RUNNING DOWNHILL

When the gutter is curving downhill, there is one adjustment that can be made to correct this problem. Always disconnect power before adjusting.

A. Loosen two outside screws then tighten center screw 1/2 turn at a time. Make sure the two height adjustment screws are set evenly. If they are not even, the box assembly will not be level; resulting in gutter being twisted. Re-tighten outside screws.

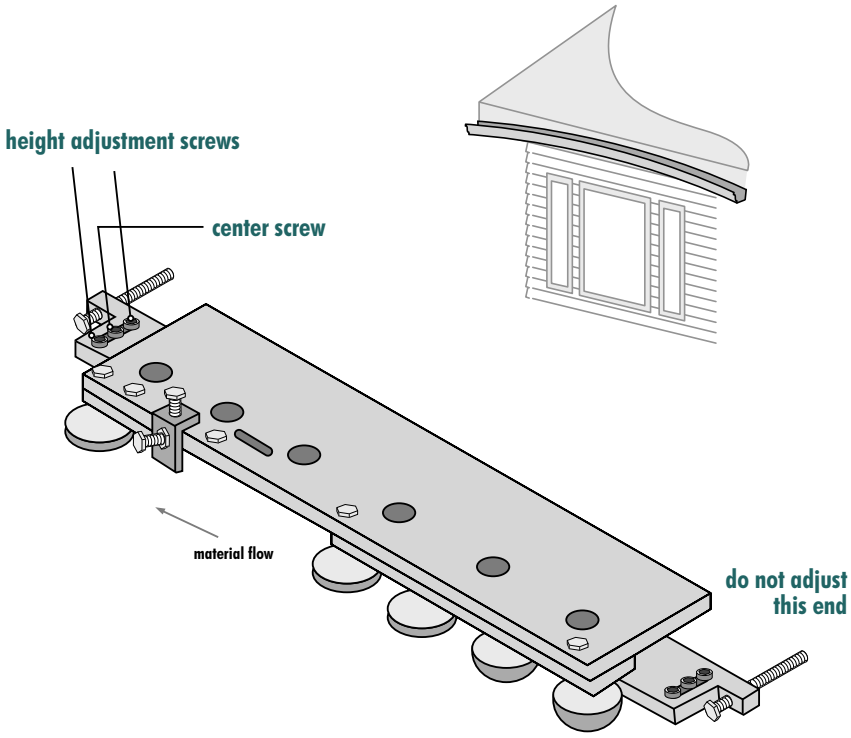

Note: When making adjustments, it is a good idea to write down how many turns are made to each adjusting screw. Then you can always reset the adjusting screws back to their original positions.

Small adjustments greatly affect the gutter path! Take care to slowly change each setting.

ACCESSORIES

Jobsite offers many different accessories to help assist you in your gutter business. For more information on the accessories contact a Jobsite representative at (800) 992-8996 or visit Jobsite online at www.jobsite-us.com.

Three Reel Adapter
This unit makes the day more efficient by having the colors you need set-up and ready to go. (reels not included)

E-Z Cut Shear Retrofit
Now you can retro fit the new E-Z cut shear to your older model gutter machines. Available for an assortment of 5" and 6" gutter machines on the market today.

Coil Cradle
This item is a must for anyone running a variety of colors for faster change over. Can be mounted on the machine or used on the floor. Bottom rollers can be relocated for smaller diameter coils.

Bottom Rib Roller Assembly
Put stiffening ribs in the bottom of your 5" or 6" gutter for those hard to run materials. Simple single lever cam action adjustment is fast and easy.

Quick Adjust and Heavy Duty Run Out Stands
The Quick Adjust run out stand allows for quick height adjustment with standard support. The Heavy Duty run out stand offers the most support with an adjustable third leg for use on uneven ground.

Alcoa Style Free Float Hook
This device bends a 3/8 return or hook in the back of the gutter for strong back support. Works with a variety of hanger systems including: Spike, Ferrule and Floating Hanger systems. Fits 5" or 6" machines.

Extra Reels
Having extra reels is great for quick change overs and better material protection.

CONTACT JOBSITE

Jobsite has put their best effort into designing, fabricating and manufacturing the highest quality machine on the market and we hope you get many years of prosperity from this superior machine.

If you are having trouble with adjustments mentioned in this manual or any other adjustments contact your local dealer. You may also contact Jobsite below:

Jobsite, Inc.
841 21 1/2 Road
Grand Junction, CO 81505
Toll Free: (800) 992-8996
Phone: (970) 523-5885
Fax: (970) 523-5881
Email: machinesales@jobsite-us.com

Visit our website for more information on this machine and our other roll forming equipment and accessories at www.jobsite-us.com.